PVA PROMET VALVES AUSTRALIA

DR Brass Ball Valves - Maxiflo

Due to the serious threat that dezincification exposes to our water industry it is essential today that DEZINCIFICATION RESITANT (DR) valves are used in the appropriate applications. This include DR valves on all potable water services including water tanks.

AAP in keeping with the demand, offer many configurations of DR maxiflo ball valves, including male/female threaded valves with optional T/Handle and extension spindle. We can also supply Lilac painted handles for recycled water use.

Materials	
PART	MATERIAL
Body	DR Brass
Seat Retainer	DR Brass
Seat	P.T.F.E.
Ball	DR Brass (Chromium Plated)
Stem	DR Brass
Gland	DR Brass
Packing	Viton (Double O-Ring)
Lever	Stainless Steel (Plastic Coated)
Lever Retaining Nut	Brass
T'Handle (Optional)	DR Brass

Specifications	
Thread	AS1722.1
Max Working Temperature	150°C (Gas = 60°C)
Cold Working Pressure	2500kPa (Gas = 1050kPa)

Applications - Apart from potable water, it is also approved for the use on low pressure gas services. It can also be used on oils, chemicals and hydrocarbons.

DR Brass Ball Valve
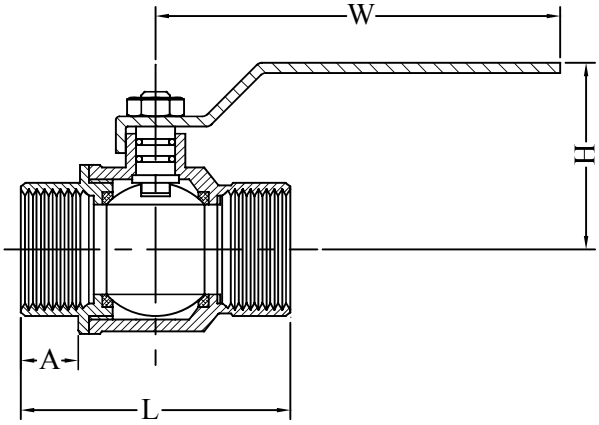
DR Brass Ball Valve							
CODE		IMPERIAL SIZE	L	H	W	A	APPROX. KG/PC
LEVER	LOCKABLE LEVER						
VBBD08		1/4	49.5	35	85	12	0.16
VBBD10		3/8	49.5	35	85	16	0.14
VBBD15	VBBD15L	1/2	60	39	95	16.5	0.2
VBBD20	VBBD20L	3/4	66.5	43	115	18	0.3
VBBD25	VBBD25L	1	76	59.5	115	19.5	0.43
VBBD32	VBBD32L	1 1/4	92.8	63	125	23	0.73
VBBD40	VBBD40L	1 1/2	100.5	77	180	23	1.12
VBBD50	VBBD50L	2	122	89	180	27	1.72
VBBD65		2 1/2	151	112	257	30	3.84
VBBD80		3	174	120	301	37	5.39